STEP AND RECESSED

Path Marker

A recessed marker light that washes adjacent horizontal surfaces.

PRODUCT CODE

LV-PM



KEY FEATURES

- Black anodised aluminium.
- IP68 construction with integral anti-wicking barrier.
- 2700K or 3000K; CRI 90+ colour rendering.
- Cree® XP-L LED with conical acrylic lens and internal PMMA TIR optic.
- Individually replaceable LED board and cable assembly for long-term serviceability; built-in open-circuit protection on each LED board.
- Broad wash across adjacent horizontal surfaces, potentially reducing the number of fittings on a scheme.
- Supplied complete: Path Marker with conical acrylic lens, PVC installation sleeve and 1 metre of cable.

IP68 | CLASS III SELV | CRI 90+ | 2700K / 3000K | CREE® XP-L | MADE IN BRITAIN

COLOUR TEMP.	2700K, 3000K
FINISH	Black anodised aluminium

OPTICAL AND OUTPUT

LIGHT SOURCE	Cree® XP-L LED on a replaceable Light Visuals proprietary LED board
COLOUR	2700K or 3000K; CRI 90+
OPTICS	Conical acrylic lens with internal PMMA TIR optic
OUTPUT AT 350 MA	Approx. 1.2 W
OUTPUT AT 700 MA	Approx. 2.4 W

Light outputs are estimates, not measured photometric claims. Output varies with the selected optic and glare-control accessories. Higher-output configurations available on request.

GENERAL

MATERIAL AND FINISH	Black anodised aluminium
PROTECTION	IP68
ELECTRICAL CLASS	Class III SELV
CERTIFICATION	CE / UKCA
ORIGIN	Designed and manufactured in Britain
SERVICEABILITY	Individually replaceable LED board and cable assembly for long-term serviceability

Dimensions, installation, wiring, ordering and warranty detail on the following pages.

PATH MARKER

Dimensions and installation

PRODUCT CODE
LV-PM

DIMENSION DRAWING

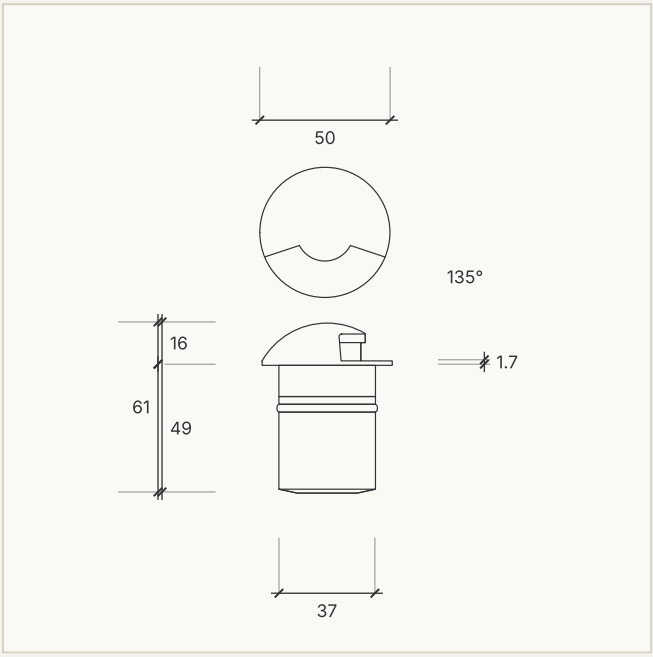

All dimensions in millimetres.

SIDE VIEW



Shown in black anodised aluminium.

INSTALLATION

SUPPLIED WITH	Path Marker with conical acrylic lens, PVC installation sleeve and 1 metre of cable
MOUNTING	Recess into the supplied PVC sleeve, in the ground or in a vertical face. Position the marker to wash the adjacent path or surface.
CUT-OUT	Nominal Ø42 mm. Use a sharp 42 mm hole cutter in good condition. Check the sleeve fit and ease the opening slightly if required.
SLEEVE	PVC, open at both ends. Supplied length 200 mm; cut to suit the installation.
CABLE EXIT	Drill cable exit holes where required. Deburr cut edges and holes to prevent cable damage.
DRAINAGE	Provide suitable drainage beneath the open-ended sleeve for in-ground installations.

CABLE SEALING

ANTI-WICKING	Integral anti-wicking barrier. A physical barrier within the resin-sealed cable assembly helps reduce moisture migration along the cable into the luminaire if an external connection allows water ingress.

PATH MARKER

Wiring and installation

PRODUCT CODE
LV-PM

SERIES WIRING DIAGRAM

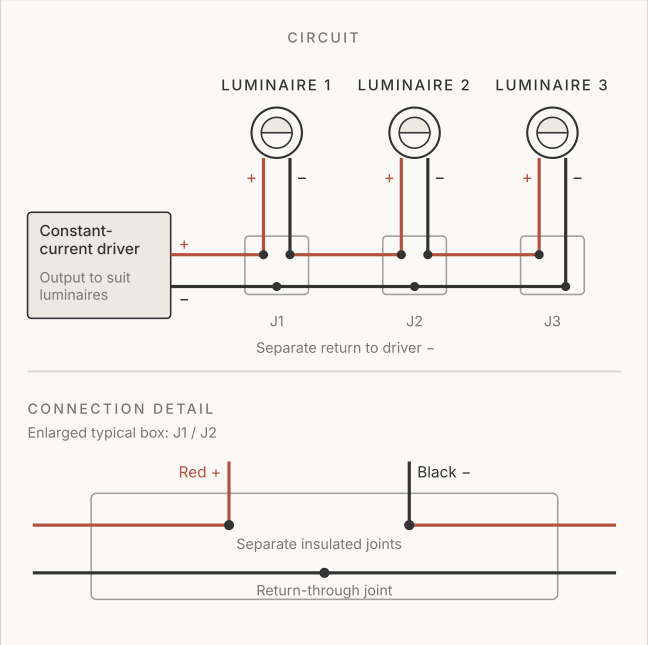

IP68 connections only. Installation by competent persons only. Luminaire leads red + / black –. Dots indicate joints. Schematic only, not to scale.

SLEEVE INSTALLATION

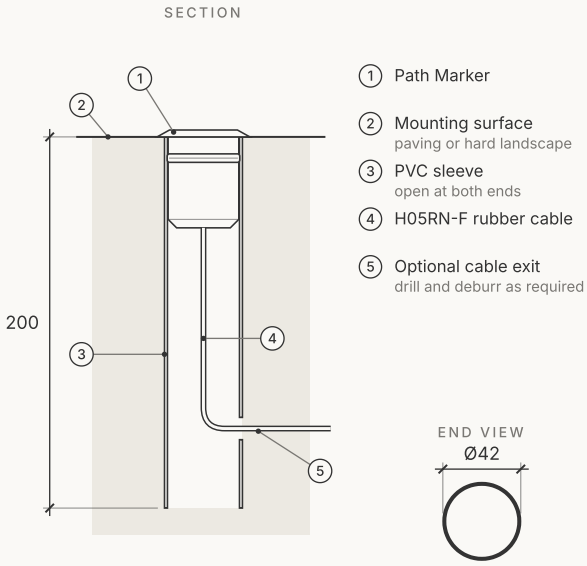

Shown recessed into paving or ground. Also suits vertical faces. Dimensions in millimetres. Not to scale.

ELECTRICAL AND DRIVER

ELECTRICAL SYSTEM	Class III SELV; series wired; remote constant-current driver
DRIVE CURRENT	350 mA or 700 mA standard
FORWARD VOLTAGE	3.2 V DC (Cree® XP-L)
LED PROTECTION	Built-in open-circuit protection on each LED board
DIMMING	Suitable 0-10 V or DALI dimmable constant-current driver; dimming is controlled by the driver, not the luminaire
CABLE	1 m of 2-core 0.75 mm² H05RN-F rubber cable

Driver selection must account for the selected drive current, total forward voltage of the series circuit and the intended dimming/control method. Electrical design and installation should be carried out by a competent person.

BEFORE CONNECTING

ELECTRICAL NOTE

Driver not included. Requires a suitable remote constant-current LED driver. Luminaires are wired in series. Do not connect directly to a standard 12 V or 24 V constant-voltage supply.

DO NOT HOT-PLUG

Isolate the driver's power supply before connecting, disconnecting or altering any LED wiring. Complete all LED connections before energising the driver. Hot-plugging can permanently damage the LEDs. Allow the driver to discharge in accordance with the manufacturer's instructions before reconnecting. Dimming to zero is not isolation.

PATH MARKER

Ordering and warranty

PRODUCT CODE
LV-PM

ORDERING CODE

BASE CODE	LV-PM
FORMAT	LV-PM - colour temperature
EXAMPLE	LV-PM-3000K 3000K, black anodised aluminium

OPTION CODES

COLOUR TEMP.	2700K or 3000K

WARRANTY

BLACK ANODISED ALUMINIUM FITTINGS	5 years
LED BOARDS	5 years

All periods cover defects in materials and workmanship. Remote drivers are excluded from the luminaire warranty; any separate manufacturer's warranty applies according to its own terms.

The five-year warranty covers defects in the aluminium body and anodised finish. Normal cosmetic weathering, surface staining and mineral deposits are excluded. Manufacturing defects remain covered. Clean regularly with mild pH-neutral soapy water and a soft, non-abrasive cloth, then rinse thoroughly with clean water. Your statutory rights are unaffected.

FINISHES AND EXCLUSIONS

LED BOARD	Excludes damage caused by lightning, electrical surges, incorrect wiring, unsuitable drivers, operation outside the specified ratings, misuse, accidental damage or unauthorised modification. Servicing and component replacement carried out in accordance with Light Visuals instructions should not invalidate the warranty.